# DESIGN ISSUES:

The network layer or layer 3 of the OSI (Open Systems Interconnection) model is concerned delivery of data packets from the source to the destination across multiple hops or links. It is the lowest layer that is concerned with end – to – end transmission. The designers who are concerned with designing this layer needs to cater to certain issues. These issues encompasses the services provided to the upper layers as well as internal design of the layer.

The design issues can be elaborated under four heads –

- Store – and – Forward Packet Switching
- Services to Transport Layer
- Providing Connection Oriented Service
- Providing Connectionless Service

# Store – and – Forward Packet Switching

The network layer operates in an environment that uses store and forward packet switching. The node which has a packet to send, delivers it to the nearest router. The packet is stored in the router until it has fully arrived and its checksum is verified for error detection. Once, this is done, the packet is forwarded to the next router. Since, each router needs to store the entire packet before it can forward it to the next hop, the mechanism is called store – and – forward switching.

# Services to Transport Layer

The network layer provides service its immediate upper layer, namely transport layer, through the network – transport layer interface. The two types of services provided are –

- Connection – Oriented Service – In this service, a path is setup between the source and the destination, and all the data packets belonging to a message are routed along this path.

- Connectionless Service – In this service, each packet of the message is considered as an independent entity and is individually routed from the source to the destination.

The objectives of the network layer while providing these services are –

- The services should not be dependent upon the router technology.
- The router configuration details should not be of a concern to the transport layer.
- A uniform addressing plan should be made available to the transport layer, whether the network is a LAN, MAN or WAN.

# Providing Connection Oriented Service

In connection – oriented services, a path or route called a virtual circuit is setup between the source and the destination nodes before the transmission starts. All the packets in the message are sent along this route. Each packet contains an identifier that denotes the virtual circuit to which it belongs to. When all the packets are transmitted, the virtual circuit is terminated and the connection is released. An example of connection – oriented service is MultiProtocol Label Switching (MPLS).

# Providing Connectionless Service

In connectionless service, since each packet is transmitted independently, each packet contains its routing information and is termed as datagram. The network using datagrams for transmission is called datagram networks or datagram subnets. No prior setup of routes are needed before transmitting a message. Each datagram belong to the message follows its own individual route from the source to the destination. An example of connectionless service is Internet Protocol or IP.

# ROUTING ALGORITHMS:

# SHORTEST PATH:

Dijkstra's algorithm is a graph search algorithm that solves the single-source shortest path problem for a graph with non-negative edge weights, producing a shortest path tree. It was conceived by computer scientist Edsger W. Dijkstra in 1956 and is widely used in various applications, such as routing protocols in computer networks and GPS navigation systems.

Here's a step-by-step explanation of Dijkstra's algorithm:

### 1. **Initialization:**

- Assign a tentative distance value to every vertex. Set the initial vertex's distance to 0 and all others to infinity.

- Mark all vertices as unvisited.

### 2. **Current Vertex Selection:**

- Choose the unvisited vertex with the smallest tentative distance as the "current vertex." Initially, this is the starting vertex.

### 3. **Neighboring Vertex Exploration:**

- For the current vertex, consider all of its neighbors (vertices that share an edge with it).

- Calculate the tentative distance from the initial vertex to each neighboring vertex through the current vertex.

### 4. **Update Tentative Distances:**

- If the calculated tentative distance is smaller than the current assigned value, update the tentative distance for that vertex.

- This step effectively improves the current best-known distance to each neighboring vertex.

### 5. **Mark Current Vertex as Visited:**

- Once all neighbors of the current vertex have been considered, mark the current vertex as visited.

- A visited vertex will not be checked again, ensuring optimality.

### 6. **Select Next Current Vertex:**

- Set the unvisited vertex with the smallest tentative distance as the new "current vertex" and repeat steps 3-5.

### 7. **Termination:**

- Continue the process until all vertices are marked as visited or the destination vertex is marked as visited.

- The algorithm terminates when the destination vertex is visited or when all vertices have been considered.

# FLOODING:

Flooding is a routing algorithm used in computer networks to distribute information to every node or device in the network. The idea behind flooding is simple: when a node receives a packet, it sends a copy of that packet to all of its neighboring nodes, except the node from which it received the packet. This process continues until the packet reaches its destination or a predetermined limit is reached.

Flooding is a robust but inefficient technique and is primarily used for broadcasting information or for applications where simplicity is more important than efficiency.

Here's a detailed explanation of flooding in routing algorithms:

### Process of Flooding:

1. **Initialization:**

   - A source node generates a packet that needs to be disseminated across the network.

   - The packet contains the information that needs to be shared.

2. **Sending the Packet:**

   - The source node broadcasts the packet to all of its neighboring nodes.

   - Broadcasting typically involves sending the packet to all directly connected nodes, except the one from which the packet was received.

3. **Reception by Neighboring Nodes:**

   - Each neighboring node that receives the packet repeats the process by broadcasting the packet to its neighbors.

- This step continues until every node in the network has received the packet or until a predefined hop limit is reached.

4. **Loop Prevention:**

- To prevent the packet from circulating endlessly in loops, nodes maintain a record of the packets they have forwarded.

- Nodes avoid forwarding a packet if they have already done so.

5. **Destination Node:**

- Eventually, the packet reaches its destination node.

- Nodes that receive the packet and determine that they are the destination take appropriate action based on the information contained in the packet.

### Challenges and Issues:

1. **Network Traffic:**

- Flooding generates a significant amount of network traffic as each node forwards the packet to all of its neighbors.

- This can lead to network congestion, especially in large networks.

2. **Efficiency:**

- Flooding is not the most efficient routing algorithm, and it may result in suboptimal paths.

- Redundant transmissions and loops can contribute to inefficiency.

3. **Loop Prevention:**

- Implementing loop prevention mechanisms is essential to avoid infinite loops in the network.

- These mechanisms add complexity to the algorithm.

4. **Scalability:**

- In large networks, the number of redundant transmissions and the overall traffic generated by flooding can make it impractical.

Flooding is commonly used in scenarios where robustness and simplicity are more critical than efficiency, such as in small networks or for broadcasting information to all nodes in the network. However, in larger and more complex networks, more sophisticated routing algorithms that address efficiency and scalability concerns are often preferred.

# HIERARICAL ROUTING:

In hierarchical routing, the **routers** are divided into regions. Each router has complete details about how to route packets to destinations within its own region. But it does not have any idea about the internal structure of other regions.

As we know, in both LS and DV algorithms, every router needs to save some information about other routers. When network

size is growing, the number of routers in the network will increase. Therefore, the size of routing table increases, then routers cannot handle network traffic as efficiently. To overcome this problem we are using hierarchical routing.

In hierarchical routing, routers are classified in groups called regions. Each router has information about the routers in its own region and it has no information about routers in other regions. So, routers save one record in their table for every other region.

For huge networks, a two-level hierarchy may be insufficient hence, it may be necessary to group the regions into clusters, the clusters into zones, the zones into groups and so on.

## BROADCASTING AND MULTICASTING

Broadcasting and multicasting are communication techniques used in computer networks to deliver data to multiple recipients. Both methods involve sending data to multiple devices, but they differ in their scope and the number of intended recipients. Here's an explanation of broadcasting and multicasting in computer networks:

### Broadcasting:

**Definition:**

- **Broadcasting** involves sending data from one sender to all potential recipients in the network.

- In a broadcast, the data is addressed to a special broadcast address, and all devices on the network segment receive and process the message.

**Characteristics:**

1. **Unspecified Recipients:**

- The sender does not need to know the specific addresses of the devices in the network.

- The data is sent to a broadcast address, and all devices within the broadcast domain receive it.

2. **Local Network Scope:**

- Broadcasting is typically confined to a local network or subnet.

- Broadcast messages do not traverse routers unless special configurations are in place.

3. **Addressing:**

- In IPv4, the broadcast address is often the highest address in a network (e.g., 192.168.1.255 for the network 192.168.1.0/24).

- In IPv6, broadcasting has been deprecated, and multicast is used instead.

4. **Examples:**

- ARP (Address Resolution Protocol) uses broadcasting to discover the MAC address corresponding to an IP address on a local network.

- DHCP (Dynamic Host Configuration Protocol) uses broadcasting to assign IP addresses dynamically.

### Multicasting:

**Definition:**

- **Multicasting** involves sending data from one sender to a selected group of recipients.

- The data is addressed to a multicast group, and only devices that belong to that group receive and process the message.

**Characteristics:**

1. **Specific Recipients:**

   - The sender addresses the data to a specific multicast group identified by a multicast group address.

   - Devices interested in receiving the data join the multicast group.

2. **Scalability:**

   - Multicasting is more scalable than broadcasting because it targets only devices interested in the content.

   - It reduces unnecessary traffic and is well-suited for applications with multiple recipients.

3. **Global Scope:**

   - Multicast messages can be sent beyond local network boundaries, crossing routers to reach devices in different subnets or networks.

4. **Addressing:**

   - In IPv4, multicast addresses are within the range 224.0.0.0 to 239.255.255.255.

   - In IPv6, multicast addresses begin with the prefix ff00::/8.

5. **Examples:**

- Streaming media services often use multicasting to efficiently deliver content to multiple users.

- Routing protocols, such as OSPF (Open Shortest Path First), use multicast for communication between routers.

### Comparison:

- **Scope:**

- Broadcasting is typically limited to a local network or subnet.

- Multicasting can have a wider scope and can extend across routers to reach devices in different networks.

- **Efficiency:**

- Broadcasting may lead to inefficiencies and increased network traffic, especially if not managed properly.

- Multicasting is more efficient as it targets only the devices interested in the content, reducing unnecessary traffic.

- **Applications:**

- Broadcasting is used for tasks like ARP and DHCP within a local network.

- Multicasting is employed in applications where content is shared among a specific group of recipients, such as streaming services and certain network protocols.

In summary, both broadcasting and multicasting are useful communication techniques in computer networks, with

broadcasting targeting all devices within a local network and multicasting selectively delivering data to a specific group of recipients. The choice between them depends on the application's requirements and the desired efficiency and scalability of the communication.

# DISTANCE VECTOR ROUTING:

Distance Vector Routing is a routing algorithm used in computer networks to determine the best path for routing data packets from a source node to a destination node. It's a distributed algorithm where each router maintains a table (vector) of distances to all reachable destinations and periodically exchanges this information with its neighboring routers. The algorithm operates based on iterative updates, adjusting the distance vectors until they converge to stable values.

Here's a detailed explanation of Distance Vector Routing:

### 1. **Basic Concepts:**

- **Distance Vector:**

  - Each router maintains a vector that represents the distances (costs) to all reachable destinations in the network.

  - The term "distance" can refer to various metrics, such as the number of hops, delay, or bandwidth.

- **Routing Table:**

  - The routing table at each router contains entries for all reachable destinations and the associated next-hop routers.

### 2. **Algorithm Operation:**

- **Initialization:**
  - Each router initializes its distance vector with the cost to reach itself as 0 and the cost to all other destinations as infinity.
  - The initial estimates are then shared with neighboring routers.

- **Exchange of Distance Vectors:**
  - Periodically, routers share their distance vectors with their neighbors.
  - The exchanged vectors are used to update each router's understanding of the network.

- **Updating Distance Vectors:**
  - When a router receives a distance vector from a neighbor, it updates its own vector based on the received information.
  - The update considers the cost to reach destinations via the neighbor and chooses the minimum cost path.

- **Iterative Process:**
  - The process of exchanging and updating distance vectors continues iteratively until the vectors stabilize.
  - Convergence is reached when no further changes occur in the vectors.

### 6. **Advantages and Disadvantages:**

- **Advantages:**
  - Simplicity: Distance vector algorithms are easy to understand and implement.
  - Decentralized: Each router independently calculates its best path based on local information.

- **Disadvantages:**
  - Convergence Time: The iterative process can take time to reach a stable state.
  - Inefficiency: In large networks, the algorithm may result in suboptimal paths and generate more network traffic.

Distance Vector Routing is suitable for small to medium-sized networks but may exhibit limitations in larger and more complex environments. More modern routing protocols, like OSPF (Open Shortest Path First) and IS-IS (Intermediate System to Intermediate System), often replace distance vector protocols in larger and more dynamic networks due to their faster convergence and more efficient use of network resources.

# CONGESTION CONTROL PROTOCOLS:

Congestion control refers to the techniques used to control or prevent congestion. Congestion control techniques can be broadly classified into two categories:

## Open Loop Congestion Control

Open loop congestion control policies are applied to prevent congestion before it happens. The congestion control is handled either by the source or the destination.

**Policies adopted by open loop congestion control –**

1. **Retransmission Policy :**
   It is the policy in which retransmission of the packets are taken care of. If the sender feels that a sent packet is lost or corrupted, the packet needs to be retransmitted. This transmission may increase the congestion in the network.
   To prevent congestion, retransmission timers must be designed to prevent congestion and also able to optimize efficiency.

2. **Window Policy :**
   The type of window at the sender's side may also affect the congestion. Several packets in the Go-back-n window are re-sent, although some packets may be received successfully at the receiver side. This duplication may increase the congestion in the network and make it worse.
   Therefore, Selective repeat window should be adopted as it sends the specific packet that may have been lost.

3. **Discarding Policy :**
   A good discarding policy adopted by the routers is that the routers may prevent congestion and at the same time partially discard the corrupted or less sensitive packages and also be able to maintain the quality of a message.
   In case of audio file transmission, routers can discard less sensitive packets to prevent congestion and also maintain the quality of the audio file.

4. **Acknowledgment Policy :**
   Since acknowledgements are also the part of the load in the network, the acknowledgment policy imposed by the receiver may also affect congestion. Several approaches can be used to prevent congestion related to acknowledgment.
   The receiver should send acknowledgement for N packets rather than sending acknowledgement for a single packet. The receiver should send an acknowledgment only if it has to send a packet or

a timer expires.

5. **Admission Policy :**
   In admission policy a mechanism should be used to prevent congestion. Switches in a flow should first check the resource requirement of a network flow before transmitting it further. If there is a chance of a congestion or there is a congestion in the network, router should deny establishing a virtual network connection to prevent further congestion.

All the above policies are adopted to prevent congestion before it happens in the network.

## Closed Loop Congestion Control

Closed loop congestion control techniques are used to treat or alleviate congestion after it happens. Several techniques are used by different protocols; some of them are:

**1. Backpressure :**
Backpressure is a technique in which a congested node stops receiving packets from upstream node. This may cause the upstream node or nodes to become congested and reject receiving data from above nodes. Backpressure is a node-to-node congestion control technique that propagate in the opposite direction of data flow. The backpressure technique can be applied only to virtual circuit where each node has information of its above upstream node.

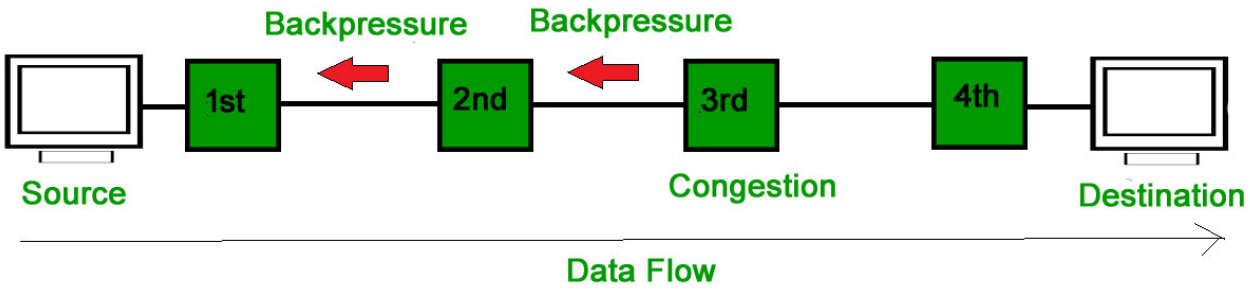

In above diagram the 3rd node is congested and stops receiving packets as a result 2nd node may be get congested due to slowing down of the output data flow. Similarly 1st node may get congested and inform the source to slow down.

**2. Choke Packet Technique :**
Choke packet technique is applicable to both virtual networks as well as datagram subnets. A choke packet is a packet sent by a node to the source to inform it of congestion. Each router monitors its resources and the utilization at each of its output lines. Whenever the resource utilization exceeds the threshold value which is set by the administrator, the router directly sends a choke packet to the source giving it a feedback to reduce the traffic. The intermediate nodes through which the packets has traveled are not warned about congestion.

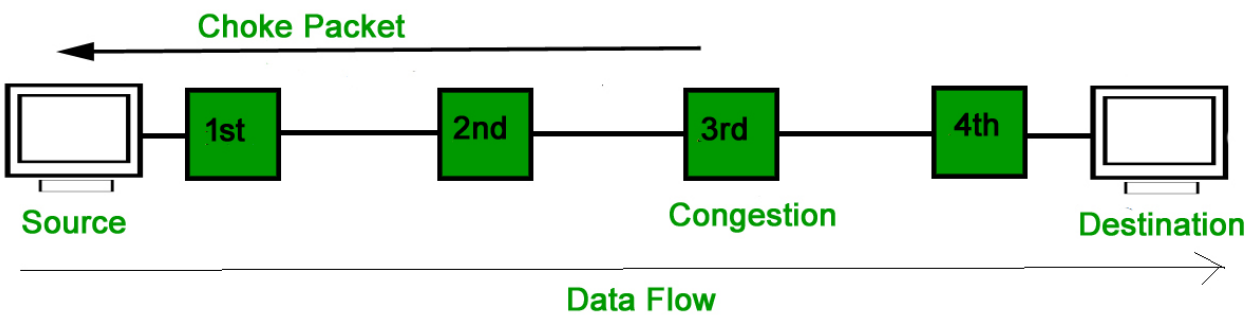


**3. Implicit Signaling :**
In implicit signaling, there is no communication between the congested nodes and the source. The source guesses that there is congestion in a network. For example when sender sends several packets and there is no acknowledgment for a while, one assumption is that there is a congestion.

**4. Explicit Signaling :**
In explicit signaling, if a node experiences congestion it can explicitly sends a packet to the source or destination to inform about congestion. The difference between choke packet and explicit signaling is that the signal is included in the packets that carry data rather than creating a

different packet as in case of choke packet technique.
Explicit signaling can occur in either forward or backward direction.

- **Forward Signaling :** In forward signaling, a signal is sent in the direction of the congestion. The destination is warned about congestion. The receiver in this case adopt policies to prevent further congestion.
- **Backward Signaling :** In backward signaling, a signal is sent in the opposite direction of the congestion. The source is warned about congestion and it needs to slow down.

# QUALITY OF SERVICE:

Quality of Service (QoS) refers to the set of technologies and techniques used to manage network resources and ensure that different types of traffic receive the desired level of service. QoS mechanisms are crucial in networks to prioritize and control the flow of data, particularly in situations where there is a mix of real-time and non-real-time traffic. Two commonly used QoS mechanisms are the Leaky Bucket and Token Bucket algorithms.

### 1. **Leaky Bucket Algorithm:**

The Leaky Bucket is a simple QoS algorithm that regulates the rate at which traffic is sent or transmitted. It ensures a constant output rate regardless of the input traffic rate. Here's how the Leaky Bucket algorithm works:

- **Bucket Analogy:**
  - Imagine a bucket with a hole in the bottom.
  - Water (representing traffic) is poured into the bucket at a variable rate.

- **Bucket Capacity and Output Rate:**
  - The bucket has a limited capacity, representing the maximum burst size or allowed amount of data.

  - Water leaks out of the bucket at a fixed rate, representing the network's output or transmission rate.

- **Traffic Shaping:**
  - Incoming traffic exceeding the bucket's capacity is considered excess traffic.
  - Excess traffic is either discarded or queued, ensuring that the output rate conforms to a predetermined limit.

- **Regulating Bursty Traffic:**
  - The Leaky Bucket helps smooth out bursty traffic patterns by allowing short bursts of traffic but maintaining an overall controlled output rate.

- **Implementation:**
  - In networking, the Leaky Bucket algorithm can be implemented using a token bucket, a counter, and a timer.

### 2. **Token Bucket Algorithm:**

The Token Bucket algorithm is another QoS mechanism that controls the rate at which traffic is allowed to be transmitted. It is often used for traffic shaping and policing. Here's how the Token Bucket algorithm works:

- **Token Generation:**
  - The bucket has a fixed capacity and a refill rate.
  - Tokens (representing permission to transmit data) are generated at a fixed rate and added to the bucket.

- **Packet Transmission:**
  - Before a packet is transmitted, it must consume tokens from the bucket.
  - If there are enough tokens, the packet is transmitted, and tokens are deducted from the bucket.

- **Token Exhaustion:**
  - If the bucket is empty (no tokens available), the transmission is either delayed or the packet is discarded.

- **Implementation:**
  - In networking, the Token Bucket algorithm can be implemented using a counter for available tokens and a timer for token generation.

- **Token Bucket for Policing:**
  - The Token Bucket can be used for traffic policing by allowing or dropping packets based on the availability of tokens.
  - This helps ensure that network traffic adheres to predefined rates.

### 3. **Key Differences:**

- **Leaky Bucket:**
  - Provides a constant output rate.
  - Excess traffic is discarded or queued.
  - Smooths out bursty traffic.

- **Token Bucket:**
  - Provides bursty output but with an average rate limit.
  - Tokens represent permission to transmit data.
  - Used for traffic shaping and policing.

### 4. **Use Cases:**

- **Leaky Bucket:**
  - Suitable for scenarios where a constant output rate is desired and bursty traffic needs to be controlled.

- **Token Bucket:**

- Commonly used in network devices for traffic shaping, policing, and ensuring adherence to specific data rate limits.

### Conclusion:

Both the Leaky Bucket and Token Bucket algorithms are effective in controlling the flow of traffic and maintaining QoS in networks. They play a crucial role in ensuring fair resource allocation, preventing congestion, and managing the transmission rates of different types of traffic. These algorithms are widely implemented in routers, switches, and other networking devices to enforce QoS policies and maintain network stability.

## INTERNETWORKING:

Internetworking in the network layer refers to the process of connecting and enabling communication between multiple independent networks. It involves the use of routers and routing protocols to facilitate the exchange of data packets between devices on different networks. The primary goal of internetworking is to create a seamless and interconnected global network, commonly exemplified by the Internet. Routers play a crucial role in internetworking by forwarding packets across different network boundaries, ensuring that data can traverse various interconnected networks to reach its destination. Routing protocols, such as the Border Gateway Protocol (BGP) in the Internet, are essential for efficient internetwork communication by exchanging routing information and determining optimal paths between networks.

THE NETWORK LAYER IN INTERNET:

The Network Layer in the Internet is responsible for logical addressing, routing, and forwarding of data packets between devices across different networks. It is implemented by the Internet Protocol (IP), primarily using IPv4 and IPv6 addresses. Routers at the Network Layer facilitate the movement of data between networks, determining optimal paths based on routing algorithms. The Internet's Network Layer ensures end-to-end communication, addressing scalability, and interoperability across diverse networks.